AP5Y

H.265 5MP 30x Starlight IR PTZ

Main Features

Starlight Ultra Low Light 0.002lux

30x Optical Zoom

IR Range: 400m

High Efficiency Video Coding

Weatherproof

Operating Temperature -40°C to 70°C

TVS 6000V, Lightning/Surge Protection

Advanced VCA features

Specifications subject to change without notice. © Ventionex, all rights reserved.

Specifications

Camera	
Image Sensor	1/2.8" CMOS
Signal System	PAL/NTSC
Min. Illumination	Color: 0.002Lux @(F1.6,AGC ON)
	B/W: 0.001Lux @(F1.6,AGC ON); 0 Lux with IR
White Balance	Auto/ ATW/ Manual
BLC/HLC	Yes
HLC	
Smart Defog	
WDR	120 dB
Exposure Mode	Auto/ Manual/Iris First/ Shutter First
Shutter Time	1/1s～1/100000s
Day& Night	IR Cut Filter with Auto Switch
Optical Zoom	30x
Digital Zoom	16x
Privacy Masking	24 Privacy Mask Programmable; Optional Multiple Colors
Auto Focus	Auto/ Semi-automatic/ Manual
OSD	Size:16×16, 32×32, 24×24, 48×48, 64×64,96×96 Letters, Week, Date, Time, Total 5 Regions ,PTZ Angle Superposition
Image	
Max. Image Resolution	5MP(2592×1944)
Mainstream	2592×1944@18fps; 2560×1920@20fps; 2592×1520@25fps; 560×1440@25fps; 2048×1536@25/30fps; 1920×1080@25/30fps; 1280×960@25/30fps; 1280×720@25/30fps
Substream	704×576@25/30fps; 640×360@25/30fps; 704×288@25/30fps; 352×288@25
3rd Stream	704×576@25/30fps; 640×480@25/30fps; 352×288@25/30fps
System Compatibility	ONVIF (Profile S), SDK,P2P
Image Compression	S+265/H.265/H.264 High Profile/MJPEG
ROI Encoding	7 Dynamic Areas for Both Main and Sub Stream
Audio Compression	G711A/G711U/ADPCM/AAC
Protocols	TCP/UDP/HTTP/MULTICAST/UPnP/DHCP/PPPoE/DDNS/FTP/NTP/RTSP/SNMP/SMTP
Remote Connection	5 Users Access at the Same Time
IP Address	Support static, dynamic IP address, Customized MTU, Customized Network card
Lens	
Focal Length	4.7-141mm, 30x
Zoom Speed	Approx.5s(Optical Wide-Tele)
Angle of View	69.5°(w)～2.7°(t)
Minimum Working Distance	1-1.5m(Wide-Tele)
Aperture Range	F1.5-F4.0
Infrared	
IR Irradiation Distance	400m
IR Irradiation Angle	Adjustable by Zoom

Specifications subject to change without notice. © Ventionex, all rights reserved.

Pan & Tilt		
Pan Range	360° Endless	
Pan Speed	Manual Speed: 0.1° -240°/s	Preset Speed: 240°/s
Preset Accuracy	±0.2°	
Tilt Range	-16°-90° (Auto Flip)	
Tilt Speed	Manual Speed: 0.1°-240°/s	Preset Speed: 240°/s
3D Position	Y	
Number of Preset	500	
Scan	8	
Cruise	16, up to 32 Presets per Cruise	
Pattern	8, Each One With 600s Memory or 300 Orders	
Power loss recovery	Y	
Guard Action	Preset/ Cruise/ Pattern/ Scan	
PTZ Position Display	Y	
Freeze Frame	Y	
RS-485 Protocols	N/A	
Network Interface		
Audio Input	1-ch Mic in(Line in Interface), Line Input 2-2.4V[p-p]; Output Impedance 1KΩ, ±10%	
Audio Output	1-ch, Line level, Impendence: 600Ω	
Ethernet	1-ch RJ45 10M/ 100M	
Alarm Input / Output	1-ch / 1-ch	
On-board Storage	MicroSD Card Slot, up to 128GB	
Reset	Y	
Advanced		
Video Analytics (IVA)	Tripwire/Double Tripwire/Perimeter/Object Abandon/Object Lost/ Running/Loitering/Parking /Crowd/Audio Abnormal Detection/Video Abnormal Detection	
Smart-tracking	N/A	
Intelligent Alarm	Harsh Voice Alarm, Motion Detection, Mask Alarm, Port Alarm, Network Disable Alarm, IP Conflict, MAC Conflict Detection	
General		
Language	English, Spanish, Korean, Italian, Turkish, Thai, Russian, Traditional Chinese, Simplified Chinese, Polish, French	
Operating Conditions	-40°C-70°C	
Relative Humidity	0～95%	
Operating Voltage	AC24V 3A	
Power Consumption	38.6W MAX	
Circuit Protection	TVS 6000V, Lightning/ Surge 4000V Protection	
Ingress Protection	IP66	
IR LEDs	10pcs	
Dimensions	372mmx222mmx222mm	
Weight	4.8KG (IP PTZ Only), 7.5KG (with Packing Box)	
Accessories (Optional)		
WBAPY	Wall mount bracket	
PMAPY	Pendant mount bracket	
JBADPY	PTZ Junction Box	
CMAPY	Outer Corner bracket	
PMADPY	Pole Mount Bracket	

Specifications subject to change without notice. © Ventionex, all rights reserved.

Outline Dimensions (mm)

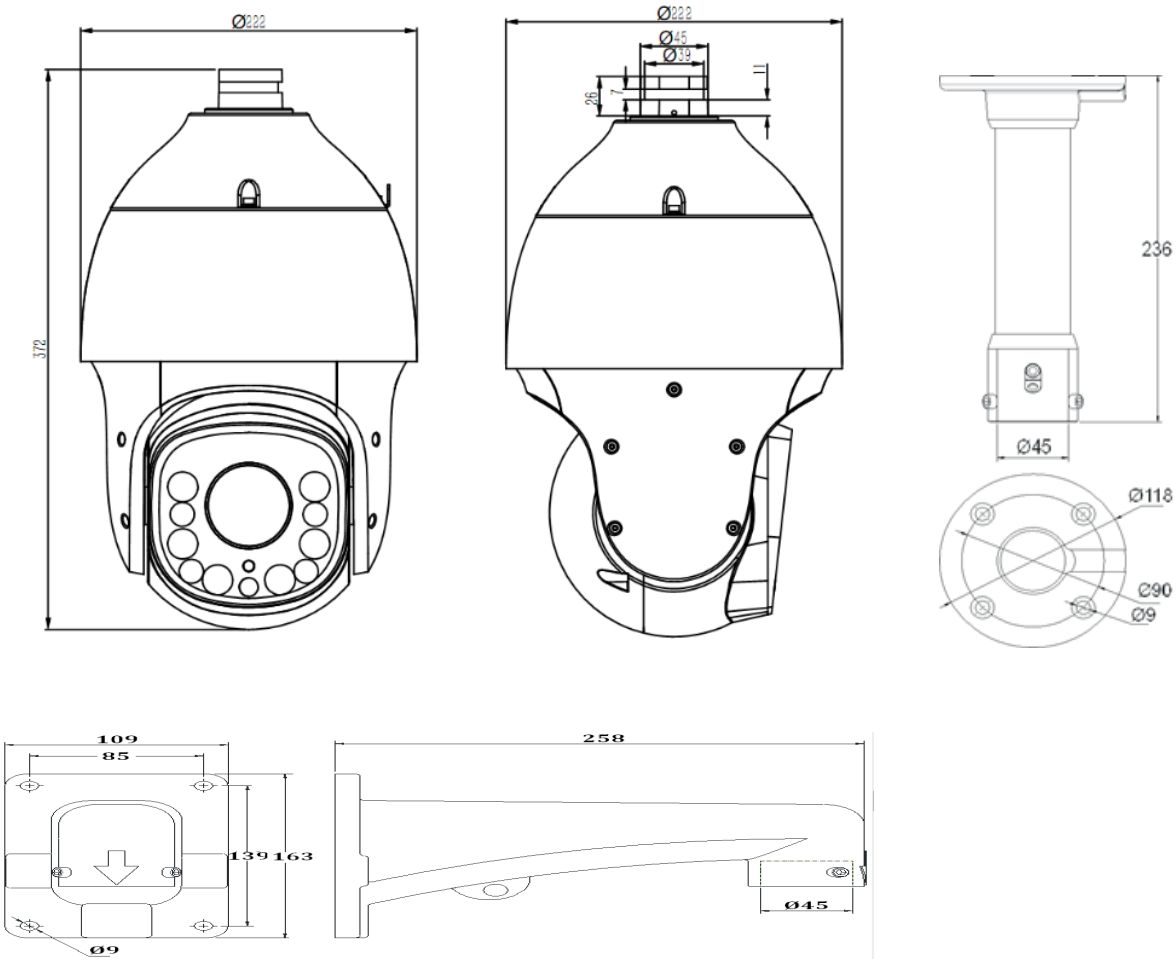

AP5Y Outline Dimensions

Specifications subject to change without notice. © Ventionex, all rights reserved.